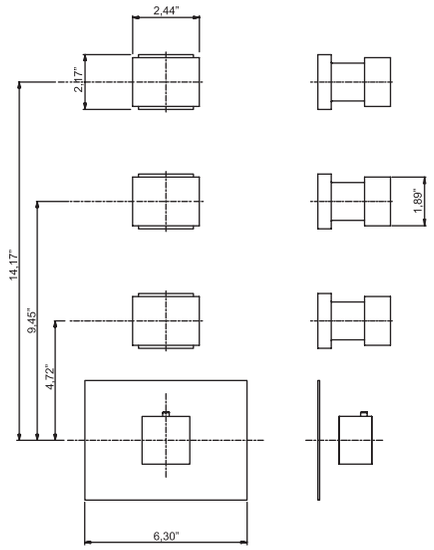

S3513/3

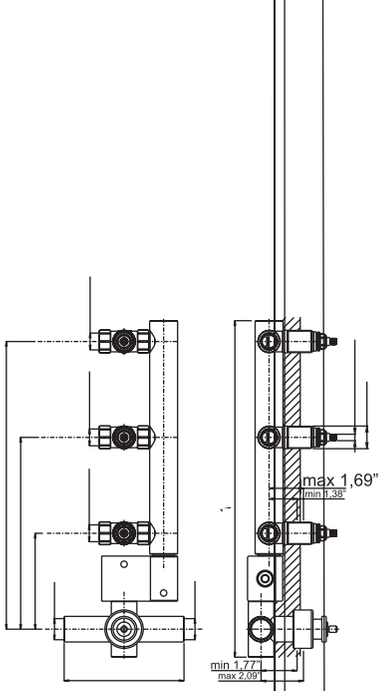

S2263

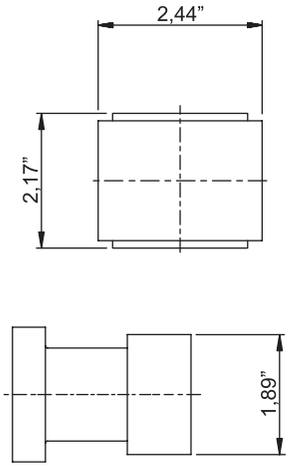

S3523/1

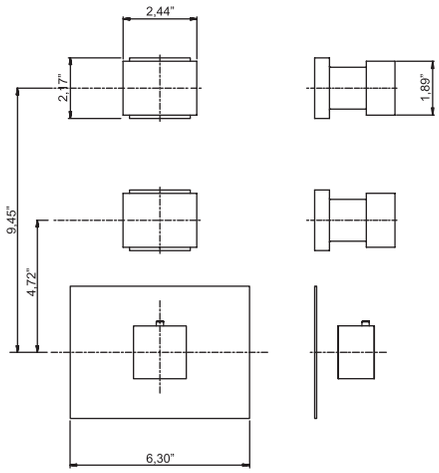

S3513/2

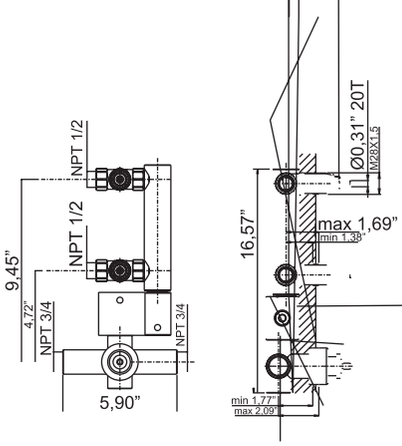

S2262

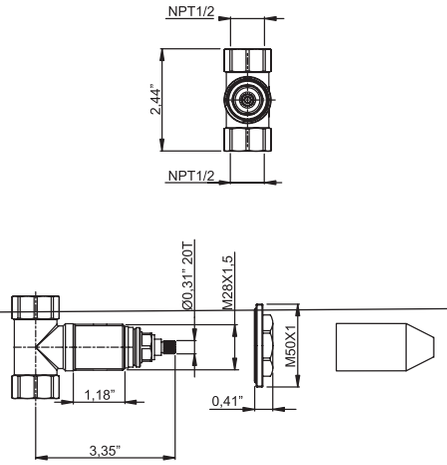

S2220

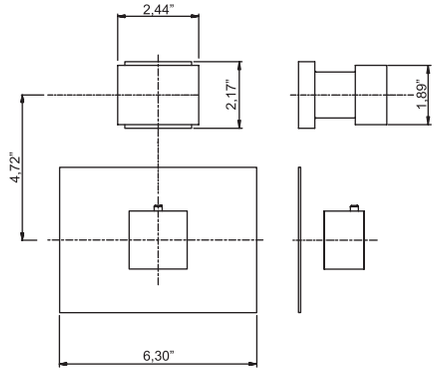

S3513/1

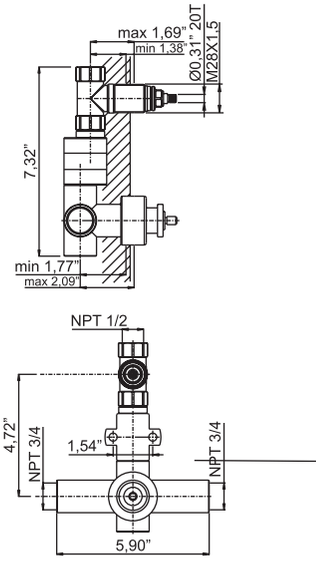

S2261

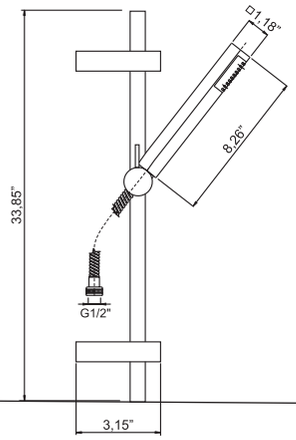

S2218

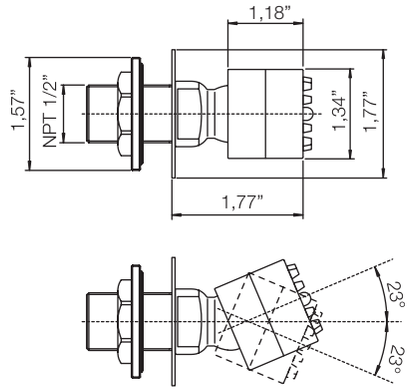

S2219

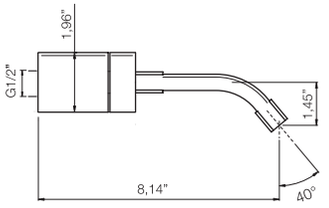

S2191

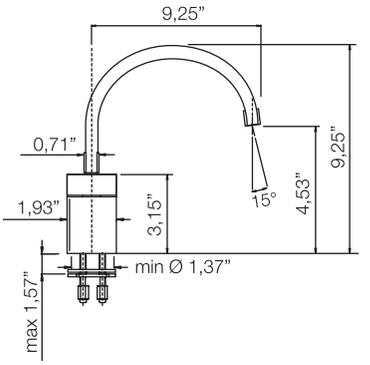

S2223

Brick Chic

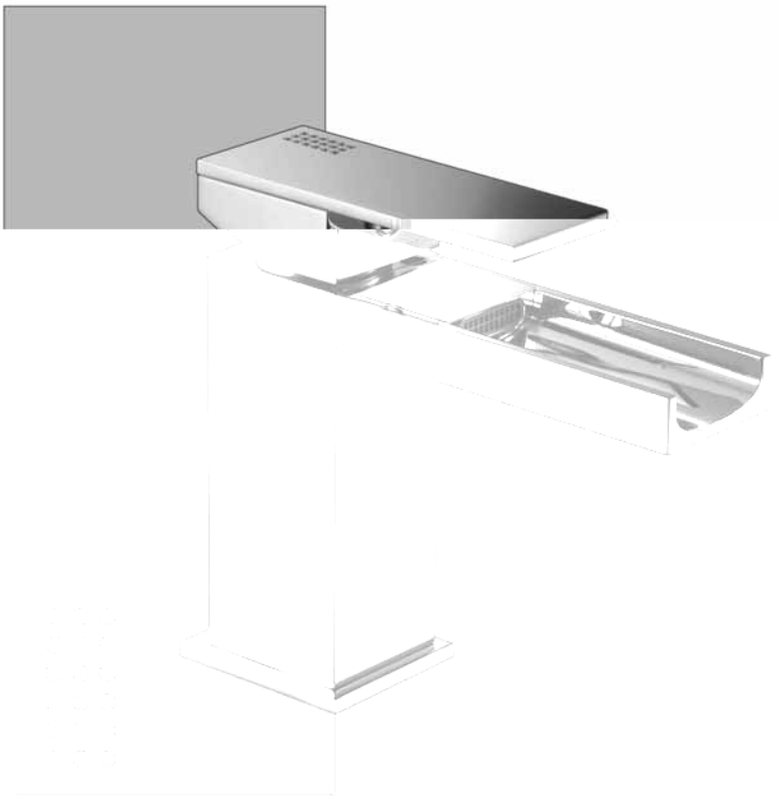

Inside:
• ceramic discs cartridges (S2036)

Technical drawings at page 117

Finishes:
CR chrome
SN brushed nickel

S3611C

Single hole cascade wash basin mixer

- n. 2 flexible hoses 14”
- 1”1/4 click clack drain with overflow

		US $
chrome	S3611CCR	1915,00
brushed nikel	S3611CSN	2350,00

Recommended item to order separately:

S407 at page 375

S3621C

Sleeve cascade wash basin mixer

- n. 2 flexible hoses 20”
- 1”1/4 click clack drain with overflow

		US $
chrome	S3621CCR	2316,00
brushed nikel	S3621CSN	2867,00

Recommended item to order separately:

S407 at page 375

S3511C

Single hole wash basin mixer

- n. 2 flexible hoses 14”
- 1”1/4 click clack drain with overflow

		US $
chrome	S3511CCR	1461,00
brushed nikel	S3511CSN	1736,00

Recommended item to order separately:
S407 at page 375

S3511/HC

Sleeve wash basin mixer

- n. 2 flexible hoses 20”
- 1”1/4 click clack drain with overflow

		US $
chrome	S3511/HCCR	1862,00
brushed nikel	S3511/HCSN	2248,00

Recommended item to order separately:
S407 at page 375

S3521C

Single-hole wash basin mixer

- n. 2 flexible hoses 14”
- 1”1/4 click clack drain with overflow
- 360° swivel

		US $
chrome	S3521CCR	1550,00
brushed nikel	S3521CSN	1859,00

Recommended item to order separately:
S407 at page 375

S3521/HC

Single-hole wash basin mixer

- n. 2 flexible hoses 20”
- 1”1/4 click clack drain with overflow
- 360° swivel

		US $
chrome	S3521/HCCR	2120,00
brushed nikel	S3521/HCSN	2598,00

Recommended item to order separately:
S407 at page 375

S3631/5C

Wall mounted single-lever wash basin mixer spout 6,1”

- exposed trim part only
- rough to be ordered separately
- 1” 1/4 click clack drain with overflow

		US $
chrome	S3631/5CCR	1842,00
brushed nikel	S3631/5CSN	2250,00

Recommended item to order separately:
S407 at page 375

Required miscellaneous article

S2935
Concealed rough parts

		US $
chrome	S2935CR	531,00
brushed nikel	S2935SN	680,00

S3631L/5C

Wall mounted single-lever wash basin mixer spout 8,3”

- exposed trim part only
- rough to be ordered separately
- 1” 1/4 click clack drain with overflow

		US $
chrome	S3631L/5CCR	1937,00
brushed nikel	S3631L/5CSN	2362,00

Recommended item to order separately:
S407 at page 375

Required miscellaneous article

S2935
Concealed rough parts

		US $
chrome	S2935CR	531,00
brushed nikel	S2935SN	680,00

S3631/5C

Wall mounted single-lever wash basin mixer spout 6,1”

- exposed trim part only
- rough to be ordered separately
- 1” 1/4 click clack drain with overflow

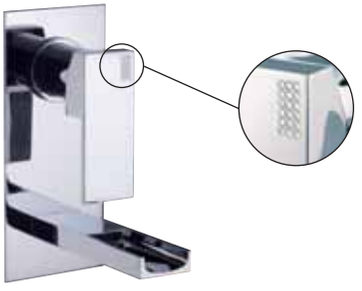

		US $
chrome	S3631/5CCR	1842,00
brushed nikel	S3631/5CSN	2250,00

Recommended item to order separately:
S407 at page 375

Required miscellaneous article

S2835
Concealed rough parts

		US $
chrome	S2835CR	531,00
brushed nikel	S2835SN	680,00

S3631L/5C

Wall mounted single-lever wash basin mixer spout 8,3”

- exposed trim part only
- rough to be ordered separately
- 1” 1/4 click clack drain with overflow

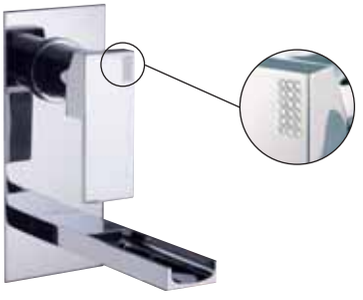

		US $
chrome	S3631L/5CCR	1937,00
brushed nikel	S3631L/5CSN	2362,00

Recommended item to order separately:
S407 at page 375

Required miscellaneous article

S2835
Concealed rough parts

		US $
chrome	S2835CR	531,00
brushed nikel	S2835SN	680,00

S3501/5C

Wall mounted single-lever wash basin mixer spout 6,1”

- exposed trim part only
- rough to be ordered separately
- 1” 1/4 click clack drain with overflow

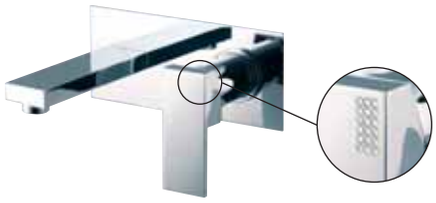

		US $
chrome	S3501/5CCR	1388,00
brushed nikel	S3501/5CSN	1646,00

Recommended item to order separately:
S407 at page 375

Required miscellaneous article

S2935
Concealed rough parts

		US $
chrome	S2935CR	531,00
brushed nikel	S2935SN	680,00

S3501L/5C

Wall mounted single-lever wash basin mixer spout 8,3”

- exposed trim part only
- rough to be ordered separately
- 1” 1/4 click clack drain with overflow

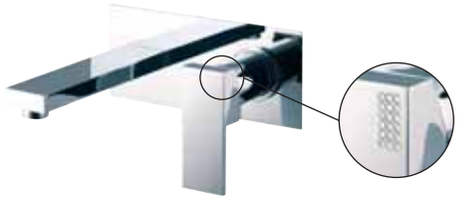

		US $
chrome	S3501L/5CCR	1435,00
brushed nikel	S3501L/5CSN	1702,00

Recommended item to order separately:
S407 at page 375

Required miscellaneous article

S2935
Concealed rough parts

		US $
chrome	S2935CR	531,00
brushed nikel	S2935SN	680,00

S3501/5C

Wall mounted single-lever wash basin mixer spout 6,1”

- exposed trim part only
- rough to be ordered separately
- 1” 1/4 click clack drain with overflow

		US $
chrome	S3501/5CCR	1388,00
brushed nikel	S3501/5CSN	1646,00

Recommended item to order separately:
S407 at page 375

Required miscellaneous article

S2835
Concealed rough parts

		US $
chrome	S2835CR	531,00
brushed nikel	S2835SN	680,00

S3501L/5C

Wall mounted single-lever wash basin mixer spout 8,3”

- exposed trim part only
- rough to be ordered separately
- 1” 1/4 click clack drain with overflow

		US $
chrome	S3501L/5CCR	1435,00
brushed nikel	S3501L/5CSN	1702,00

Recommended item to order separately:
S407 at page 375

Required miscellaneous article

S2835
Concealed rough parts

		US $
chrome	S2835CR	531,00
brushed nikel	S2835SN	680,00

S3512C

Bidet mixer

- n. 2 flexible hoses 14”
- 1” 1/4 click clack drain with overflow

		US $
chrome	S3512CCR	1461,00
brushed nikel	S3512CSN	1736,00

Recommended item to order separately:
S402 at page 375

S3522C

Bidet mixer with swivel spout

- n. 2 flexible hoses 14”
- 1” 1/4 click clack drain with overflow
- 360° swivel

		US $
chrome	S3522CCR	1550,00
brushed nikel	S3522CSN	1859,00

Recommended item to order separately:
S402 at page 375

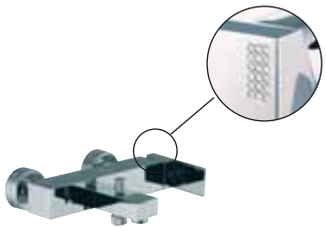

S3504/5C

Deck mounted tub mixer with hand shower set

- automatic diverter
- 60” breil flexible hose
- anti-limestone hand shower
- wall shower holder
- n. 2 offset connectors 1/2”

		US $
chrome	S3504/5CCR	2366,00
brushed nikel	S3504/5CSN	2903,00

S3514C

Four holes deck mounted tub mixer with hand shower

- automatic diverter
- 60” breil flexible hose
- anti-limestone hand shower
- shower holder

		US $
chrome	S3514CCR	2913,00
brushed nikel	S3514CSN	3569,00

NOTE:
for installation an access pannel is required

Recommended item to order separately:

S2193
Inox coverplate complete for deck mounted bath set

		US $
	S2193	458,00

S4044/1

Wall mounted thermostatic bath mixer without hand shower set

- automatic diverter
- n. 2 eccentric couplings 1/2”

		US $
chrome	S4044/1CR	1856,00
brushed nikel	S4044/1SN	2319,00

Recommended item to order separately:

S2218

Brass sliding rail

- 60” flexible hose
- anti-limestone hand shower

		US $
chrome	S2218CR	612,00
brushed nikel	S2218SN	891,00

S4044

Wall mounted thermostatic bath mixer with hand shower set

- automatic diverter
- 60” flexible hose
- anti-limestone hand shower
- wall shower holder
- n. 2 eccentric couplings 1/2”

		US $
chrome	S4044CR	2053,00
brushed nikel	S4044SN	2562,00

S4044/2

Wall mounted thermostatic tub/shower mixer, with rainhead and hand shower set

- automatic diverter
- 60” flexible hose
- anti-limestone hand shower
- adjustable height
- n. 2 eccentric couplings 1/2”
- head shower 6” x 8”

		US $
chrome	S4044/2CR	5096,00
brushed nikel	S4044/2SN	6369,00

S4044/4

Floor mounted thermostatic bath mixer on risers with hand shower set

- automatic diverter
- 60” flexible hose
- anti-limestone hand shower

		US $
chrome	S4044/4CR	3087,00
brushed nikel	S4044/4SN	3914,00

S3513/2

Built-in thermostatic mixer

- exposed trim part only
- rough to be ordered separately
- 2 volume control handles
- graduated handle
- safety lock handle

		US $
chrome	S3513/2CR	1170,00
brushed nikel	S3513/2SN	1463,00

Required item to order separately

S2262

Thermostatic mixer rough

- 2 volume control valves
- 2 outlets 1/2”
- 3/4” inlets

		US $
	S2262	1332,00

SAMPLE INSTALLATION

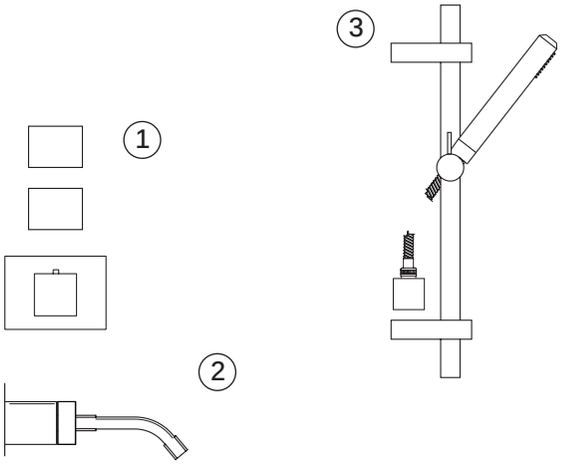

1	S3513/2 (page 109) + S2262 (page 109)
2	S2191 (page 116)
3	S2218 (page 115) + S2190 (page 115)

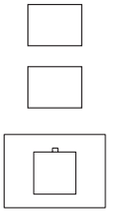

1	S3513/2 (page 109) + S2262 (page 109)
2	S2191 (page 116)
3	S2200 (page 115) + S2123 (page 115)

S3505/1C

Wall mounted shower mixer
without shower set

- n. 2 eccentric couplings 1/2”

NOTE:
to meet the required u.s.
plumbing code, please provide
a remote pressure balance valve

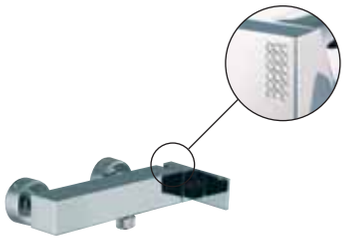

		US $
chrome	S3505/1CCR	1678,00
brushed nikel	S3505/1CSN	2011,00

Recommended item to order separately:

S2218

Brass sliding rail

- 60” breil flexible hose
- anti-limestone hand shower

		US $
chrome	S2218CR	612,00
brushed nikel	S2218SN	891,00

S3505C

Wall mounted shower mixer
with shower set

- 60” breil flexible hose
- anti-limestone hand shower
- wall shower holder
- n. 2 eccentric couplings 1/2”

NOTE:
to meet the required u.s.
plumbing code, please provide
a remote pressure balance valve

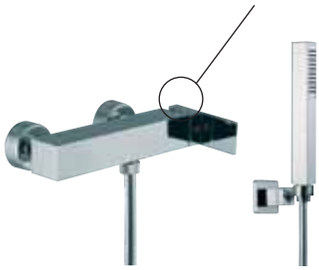

		US $
chrome	S3505CCR	1875,00
brushed nikel	S3505CSN	2254,00

S3505/2C

Wall mounted shower mixer with rainhead
and hand shower set

- 60” breil flexible hose
- anti-limestone hand shower
- automatic diverter
- adjustable height
- n. 2 eccentric couplings 1/2”
- head shower 6” x 8”

NOTE:
to meet the required u.s. plumbing
code, please provide a remote
pressure balance valve

		US $
chrome	S3505/2CCR	4918,00
brushed nikel	S3505/2CSN	6061,00

S4045/1

Wall mounted thermostatic shower mixer without shower set

- n. 2 eccentric couplings 1/2”

		US $
chrome	S4045/1CR	1771,00
brushed nikel	S4045/1SN	2249,00

Recommended item to order separately:

S2218

Brass sliding rail

- 60” flexible hose
- anti-limestone hand shower

		US $
chrome	S2218CR	612,00
brushed nikel	S2218SN	891,00

S4045

Wall mounted thermostatic shower mixer with hand shower set

- 60” flexible hose
- anti-limestone hand shower
- wall shower holder
- n. 2 eccentric couplings 1/2”

		US $
chrome	S4045CR	1968,00
brushed nikel	S4045SN	2492,00

S4045/2

Wall mounted thermostatic shower mixer with rainhead and hand shower set

- 60” flexible hose
- anti-limestone hand shower
- adjustable height
- automatic diverter
- n. 2 eccentric couplings 1/2”
- head shower 6” x 8”

		US $
chrome	S4045/2CR	5011,00
brushed nikel	S4045/2SN	6299,00

S3513/3

Built-in thermostatic mixer

- exposed trim part only
- rough to be ordered separately
- 3 volume control handles
- graduated handle
- safety lock handle

		US $
chrome	S3513/3CR	1395,00
brushed nikel	S3513/3SN	1744,00

Required item to order separately

S2263

Thermostatic mixer rough

- 3 volume control valves
- 3 outlets 1/2”
- 3/4” inlets

	US $
S2263	1494,00

S3513/2

Built-in thermostatic mixer

- exposed trim part only
- rough to be ordered separately
- 2 volume control handles
- graduated handle
- safety lock handle

		US $
chrome	S3513/2CR	1170,00
brushed nikel	S3513/2SN	1463,00

Required item to order separately

S2262

Thermostatic mixer rough

- 2 volume control valves
- 2 outlets 1/2”
- 3/4” inlets

	US $
S2262	1332,00

S3513/1

Built-in thermostatic mixer

- exposed trim part only
- rough to be ordered separately
- volume control handle
- graduated handle
- safety lock handle

		US $
chrome	S3513/1CR	945,00
brushed nikel	S3513/1SN	1181,00

Required item to order separately

S2261

Thermostatic mixer rough

- 1 volume control valve
- 1 outlet 1/2”
- 3/4” inlets

	US $
S2261	1188,00